Electrolux PROFESSIONAL

Modular Cooking Range Line 700XP Gas Solid Top on Gas Oven with 2 Burners

ITEM #

MODEL #

NAME #

SIS #

AIA #



371009 (E7STGH30G0) Half module gas solid top (3,8 kW) with 2 burners (5,5 kW each) on gas oven (6 kW)

Short Form Specification

Item No.

High efficiency 3.8 kW central burner, flame failure device and protected pilot light. Suitable for natural gas or LPG. Large cooking surface with different heating zones. Large flat cooking surface made in cast iron allows for the use of a number of various sized pots and pans, all easily moved across the surface without lifting. Stainless steel oven chamber with 3 levels of runners to accomodate 2/1 GN shelves (2 steam pans). Two high efficiency 5,5 kW flower flame burners with continuous power regulation and protected pilot light interchangeable on site. Flame failure device as standard on burners to protect against accidental extinguishing. Exterior panels in stainless steel with Scotch Brite finish. One piece pressed work top in 1.5 mm thick stainless steel. Right-angled side edges to allow flush-fitting junction between units.

APPROVAL:

Main Features

- Gas heated, 3.8 kW central burner, solid top.
- Durable cast iron cooking plate, easy to clean.
- The center of the plate can reach a maximum temperature of 500 °C while decreasing outwards.
- Central burner with optimized combustion, flame failure device and protected pilot light.
- Temperature gradients to satisfy different cooking needs, provided over the whole plate thanks to the temperature fine-tuning by zone.
- Various sizes of pans can be used at the same time due to large surface area with no intermediate sectors.
- Pans can easily be moved from one area to another without lifting.
- Base compartment consists of a gas heated standard oven with stainless steel burners and self stabilizing flame positioned beneath the base plate. Stainless steel oven chamber to have 3 levels of runners to accomodate 2/1 GN shelves (2 steam pans) and rib
- Oven thermostat adjustable from 110 °C to 270 ° C.
- Burners with optimized combustion interchangeable on site.
- Flame failure device on each burner protects against gas leakage when accidental extinguishing of the flame occurs.
- All major compartments located in front of unit for ease of maintenance.

Construction

- All exterior panels in Stainless Steel with Scotch Brite finishing.
- One piece pressed 1.5 mm work top in Stainless steel.
- Model has right-angled side edges to allow flush fitting joints between units, eliminating gaps and possible dirt traps.
- IPx4 water protection.

Included Accessories

- 1 of GN2/1 chrome grid for static oven PNC 164250

Optional Accessories

- GN2/1 chrome grid for static oven PNC 164250 ❑
- Junction sealing kit PNC 206086 ❑
- Draught diverter, 150 mm diameter PNC 206132 ❑
- Matching ring for flue condenser, 150 mm diameter PNC 206133 ❑
- Kit 4 wheels - 2 swivelling with brake - it is mandatory to install Base support and wheels PNC 206135 ❑

• Flanged feet kit	PNC 206136	❑
• Frontal kicking strip for concrete installation, 800mm	PNC 206148	❑
• Frontal kicking strip for concrete installation, 1000mm	PNC 206150	❑
• Frontal kicking strip for concrete installation, 1200mm	PNC 206151	❑
• Frontal kicking strip for concrete installation, 1600mm	PNC 206152	❑
• Frontal kicking strip, 800mm (not for refr-freezer base)	PNC 206176	❑
• Frontal kicking strip, 1000mm (not for refr-freezer base)	PNC 206177	❑
• Frontal kicking strip, 1200mm (not for refr-freezer base)	PNC 206178	❑
• Frontal kicking strip, 1600mm (not for refr-freezer base)	PNC 206179	❑
• Kit 4 feet for concrete installation (not for 900 line free standing grill)	PNC 206210	❑
• Flue condenser for 1 module, 150 mm diameter	PNC 206246	❑
• Pair of side kicking strips	PNC 206249	❑
• Single burner smooth plate for direct cooking - fits frontal burners only	PNC 206260	❑
• Single burner ribbed plate for direct cooking- fits frontal burners only	PNC 206261	❑
• Single burner radiant plate for pan support	PNC 206264	❑
• Pair of side kicking strips for concrete installation	PNC 206265	❑
• Water column with swivel arm (water column extension not included)	PNC 206289	❑
• Water column extension for 700 line	PNC 206291	❑
• Stainless steel double grid for 2 burners	PNC 206297	❑
• Chimney upstand, 800mm	PNC 206304	❑
• Right and left side handrails	PNC 206307	❑
• Back handrail 800 mm	PNC 206308	❑
• Wok pan support for open burners (700/900)	PNC 206363	❑
• Base support for feet or wheels - 800mm (700/900)	PNC 206367	❑
• Base support for feet or wheels - 1200mm (700/900)	PNC 206368	❑
• Base support for feet or wheels - 1600mm (700/900)	PNC 206369	❑
• Base support for feet or wheels - 2000mm (700/900)	PNC 206370	❑
• Rear paneling - 800mm (700/900)	PNC 206374	❑
• Rear paneling - 1000mm (700/900)	PNC 206375	❑
• Rear paneling - 1200mm (700/900)	PNC 206376	❑
• Chimney grid net, 400mm (700XP/900)	PNC 206400	❑
• Kit G.25.3 (NI) gas nozzles for 700 solid top and solid top combined with burners	PNC 206461	❑
• 2 side covering panels for free standing appliances	PNC 216000	❑
• Frontal handrail, 800mm	PNC 216047	❑
• Frontal handrail, 1200mm	PNC 216049	❑
• Frontal handrail, 1600mm	PNC 216050	❑
• Large handrail - portioning shelf, 800mm	PNC 216186	❑
• Pressure regulator for gas units	PNC 927225	❑

CE

The company reserves the right to make modifications to the products without prior notice. All information correct at time of printing.

Modular Cooking Range Line 700XP Gas Solid Top on Gas Oven with 2 Burners

Front

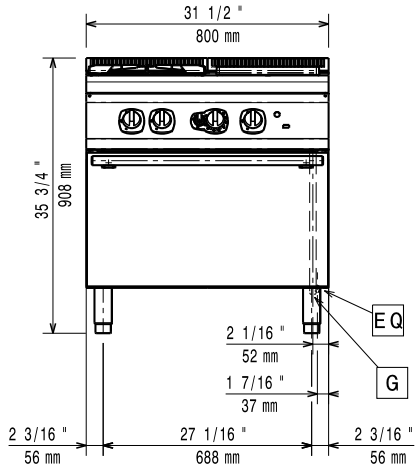

Side

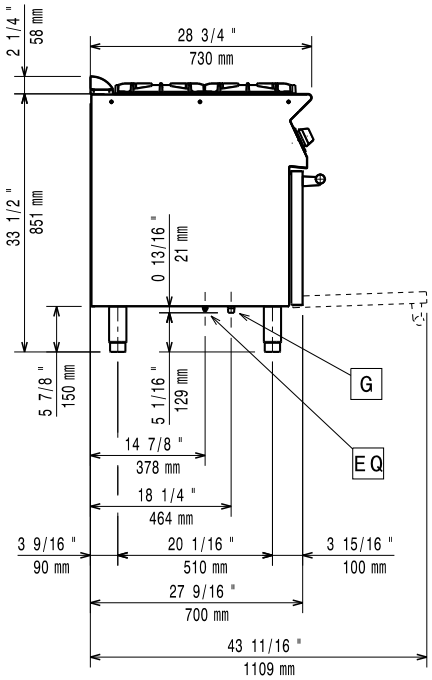

EQ = Equipotential screw
G = Gas connection

Top

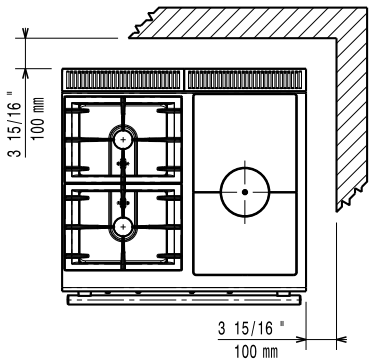

Gas

Gas Power:	20.6 kW
Standard gas delivery:	Natural Gas G20 (20mbar)
Gas Type Option:	LPG
Gas Inlet:	1/2"

Key Information:

If appliance is set up or next to or against temperature sensitive furniture or similar, a safety gap of approximately 150 mm should be maintained or some form of heat insulation fitted.

Oven working Temperature:	110 °C MIN; 270 °C MAX
Oven Cavity Dimensions (width):	540 mm
Oven Cavity Dimensions (height):	300 mm
Oven Cavity Dimensions (depth):	650 mm
Net weight:	90 kg
Shipping weight:	109 kg
Shipping height:	1080 mm
Shipping width:	820 mm
Shipping depth:	860 mm
Shipping volume:	0.76 m³
Front Burners Power:	5.5 - kW
Back Burners Power:	5.5 - 0 kW
[NOT TRANSLATED]	N7TG
Back Burners Dimension - mm	Ø 60
Front Burners Dimension - mm	Ø 60
Solid top usable surface (width):	340 mm
Solid top usable surface (depth):	595 mm

The company reserves the right to make modifications to the products without prior notice. All information correct at time of printing.

2026.11.19